LUMINESS AIR creative director pos & consumer experience rebranding

CLIENT
luminess air
12802 Capricorn Dr.,
Stafford, Texas 77477
USA ,
Tel 713.532.2408 ex 208 •
Fax 713.532.2499

PROJECT
luminess air CD pos

PROJECT NO.
164

ISSUE
03.09.12

DRAWN BY
jamion blackwell

moio®
DESIGN
16214 Sir William Drive
Spring, TX 77379
Tel: 832.698.1266
contact@mojocosmetics.us

v.1

products in packaging

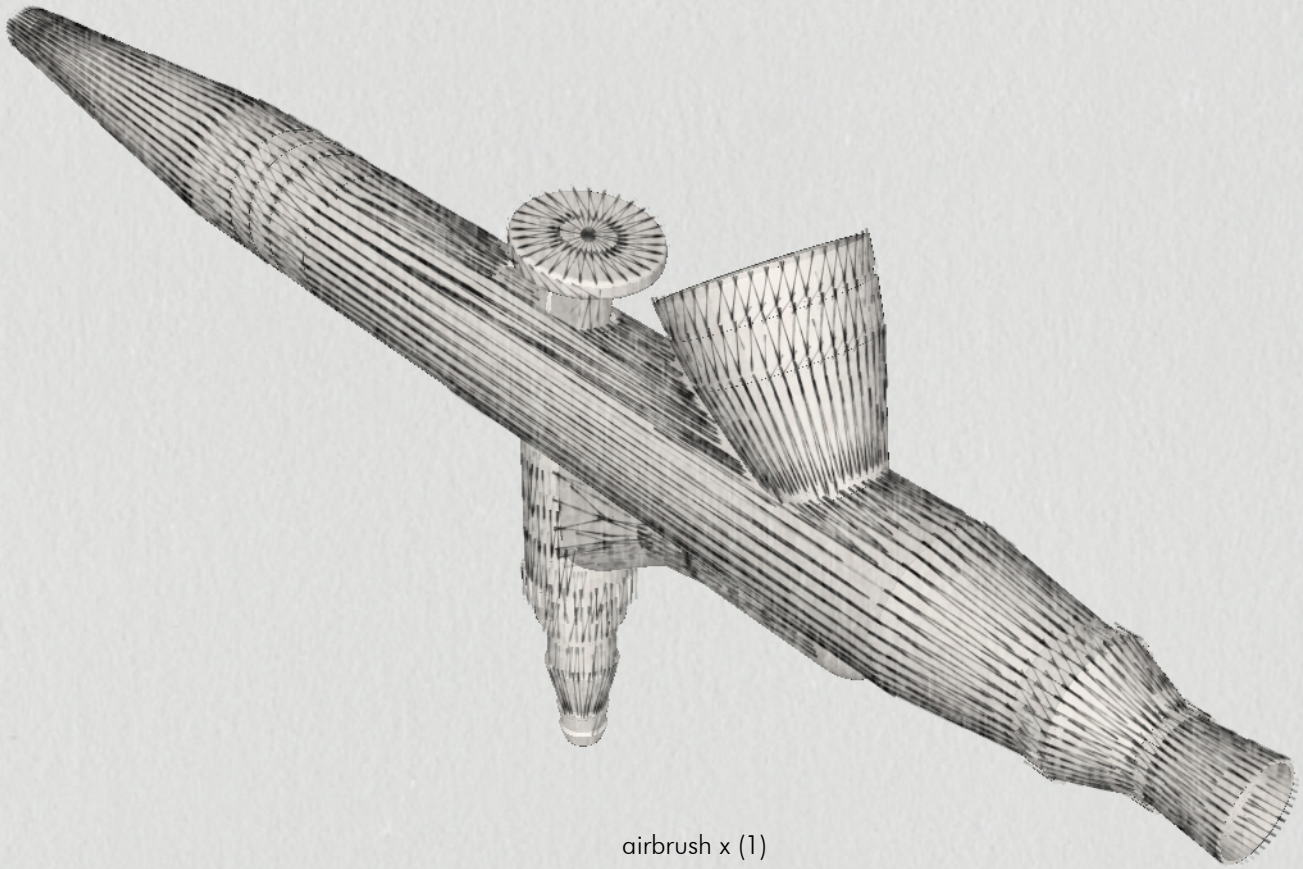

airbrush x (1)

CLIENT
luminess air
12802 Capricorn Dr.,
Stafford, Texas 77477
USA,
Tel 713.532.2408 ex 208 •
Fax 713.532.2499

PROJECT
luminess air CD pos

PROJECT NO.
164

ISSUE
03.09.12

DRAWN BY
jamion blackwell

moio®
DESIGN
16214 Sir William Drive
Spring, TX 77379
Tel: 832.698.1266
contact@mojocosmetics.us

v.1

products in packaging

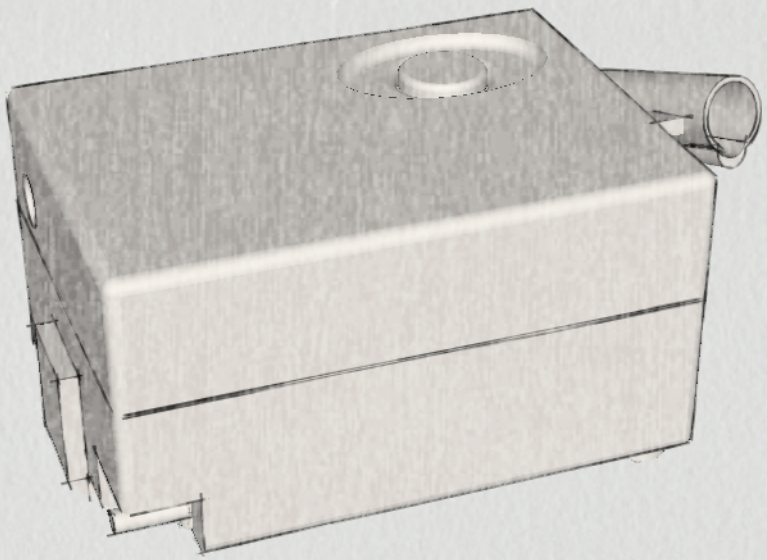

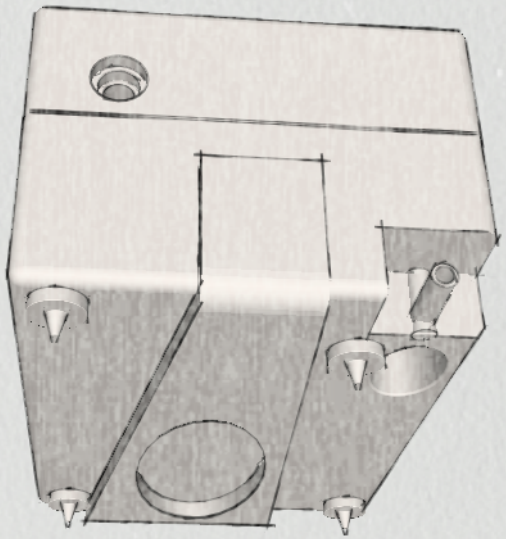

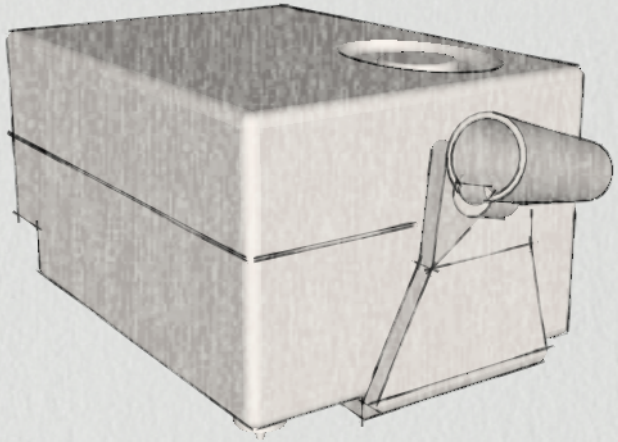

compressor x (1)
(rubber hose not shown)

CLIENT
luminess air
12802 Capricorn Dr.,
Stafford, Texas 77477
USA ,
Tel 713.532.2408 ex 208 •
Fax 713.532.2499

PROJECT
luminess air CD pos

PROJECT NO.
164

ISSUE
03.09.12

DRAWN BY
jamion blackwell

moio®
DESIGN
16214 Sir William Drive
Spring, TX 77379
Tel: 832.698.1266
contact@mojocosmetics.us

v.1

products in packaging

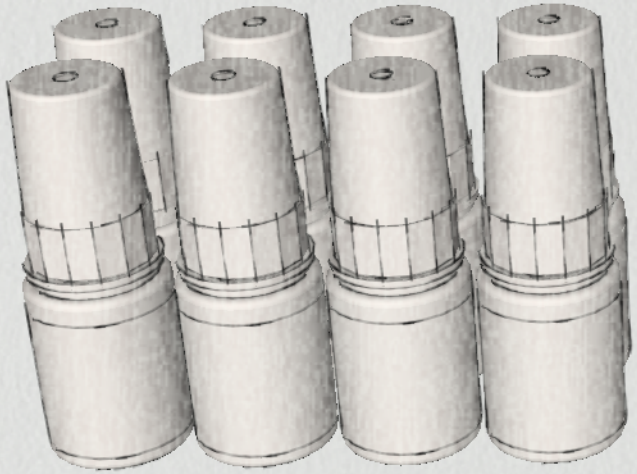

sample foundations and ancillary x (8); 1 box x (1)

CLIENT
luminess air
12802 Capricorn Dr.,
Stafford, Texas 77477
USA ,
Tel 713.532.2408 ex 208 •
Fax 713.532.2499

PROJECT
luminess air CD pos

PROJECT NO.
164

ISSUE
03.09.12

DRAWN BY
jamion blackwell

moio®
DESIGN
16214 Sir William Drive
Spring, TX 77379
Tel: 832.698.1266
contact@mojocosmetics.us

v.1

products in packaging

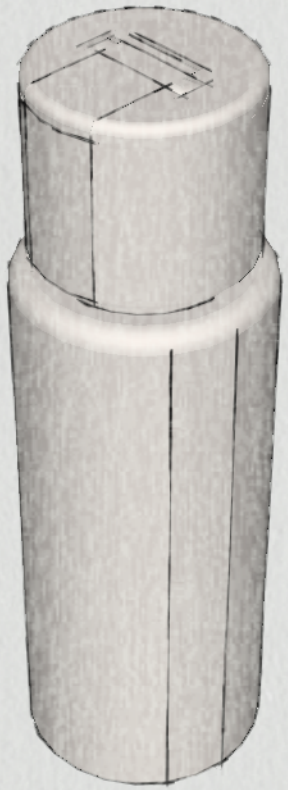

cleaner bottle x (1)

CLIENT
luminess air
12802 Capricorn Dr.,
Stafford, Texas 77477
USA ,
Tel 713.532.2408 ex 208 •
Fax 713.532.2499

PROJECT
luminess air CD pos

PROJECT NO.
164

ISSUE
03.09.12

DRAWN BY
jamion blackwell

mojo®
DESIGN
16214 Sir William Drive
Spring, TX 77379
Tel: 832.698.1266
contact@mojocosmetics.us

products in packaging

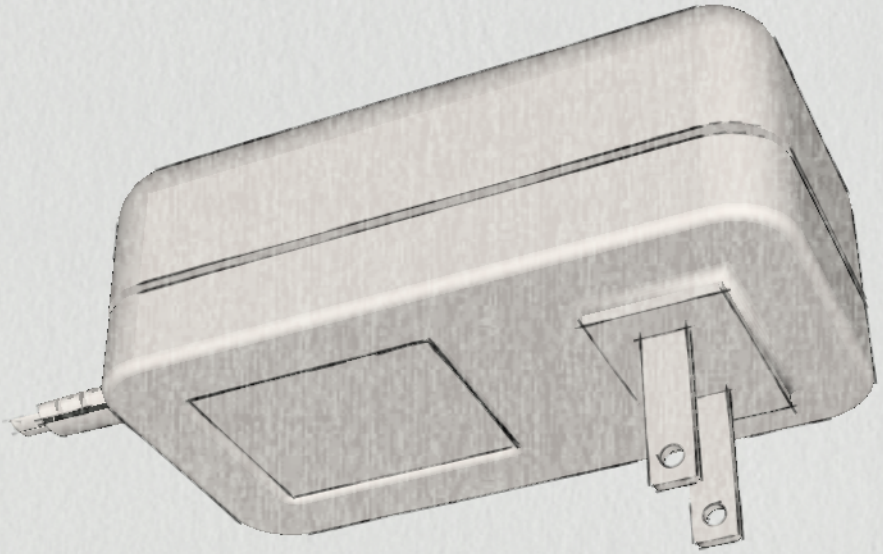

transformer & cord x (1)

CLIENT
luminess air
12802 Capricorn Dr.,
Stafford, Texas 77477
USA ,
Tel 713.532.2408 ex 208 •
Fax 713.532.2499

PROJECT
luminess air CD pos

PROJECT NO.
164

ISSUE
03.09.12

DRAWN BY
jamion blackwell

moio®
DESIGN
16214 Sir William Drive
Spring, TX 77379
Tel: 832.698.1266
contact@mojocosmetics.us

v.1

structure

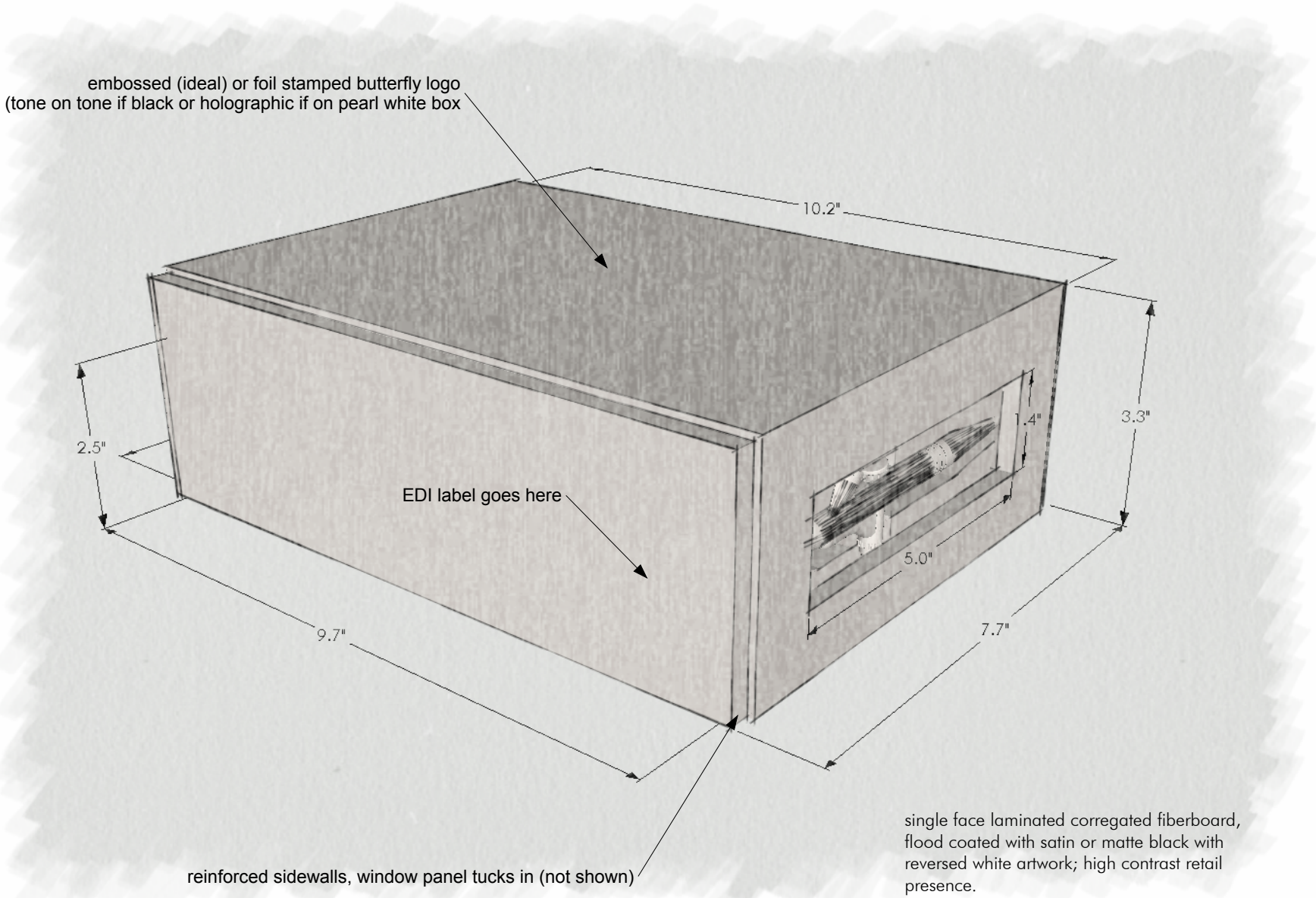

single face laminated corregated fiberboard, flood coated with satin or matte black with reversed white artwork; high contrast retail presence.

1/1 flood coated black inside

variant: pearlized white, with holographic silver foil. (for color)

CLIENT
luminess air
12802 Capricorn Dr.,
Stafford, Texas 77477
USA ,
Tel 713.532.2408 ex 208 •
Fax 713.532.2499

PROJECT
luminess air CD pos

PROJECT NO.
164

ISSUE
03.09.12

DRAWN BY
jamion blackwell

moio®
DESIGN
16214 Sir William Drive
Spring, TX 77379
Tel: 832.698.1266
contact@mojocosmetics.us

v.1

structure

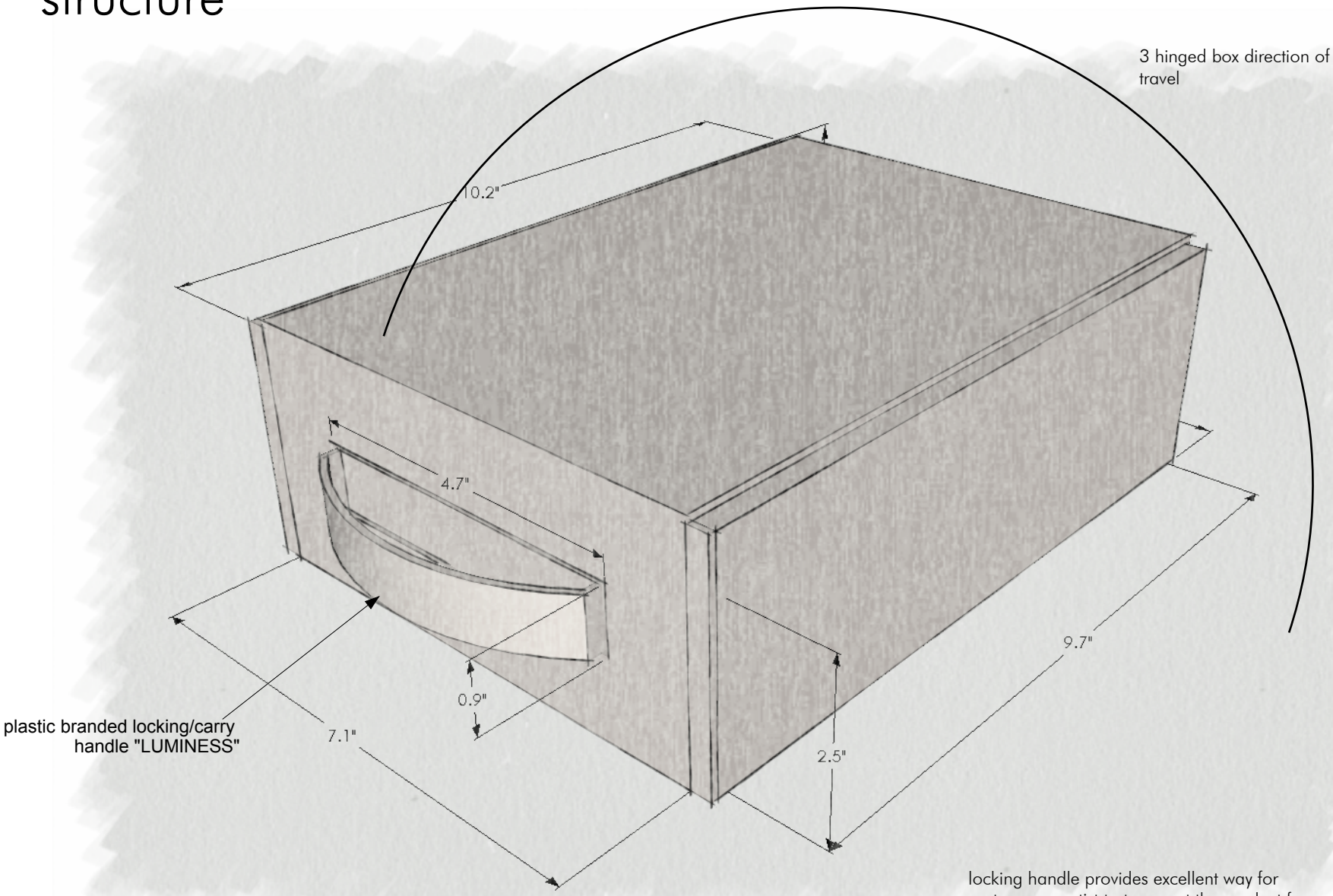

locking handle provides excellent way for customer or artist to transport the product from location to location and shows off the strong simple branding behind luminess air.

CLIENT
luminess air
12802 Capricorn Dr.,
Stafford, Texas 77477
USA ,
Tel 713.532.2408 ex 208 •
Fax 713.532.2499

PROJECT
luminess air CD pos

PROJECT NO.
164

ISSUE
03.09.12

DRAWN BY
jamion blackwell

moio DESIGN
16214 Sir William Drive
Spring, TX 77379
Tel: 832.698.1266
contact@mojocosmetics.us

v.1

structure

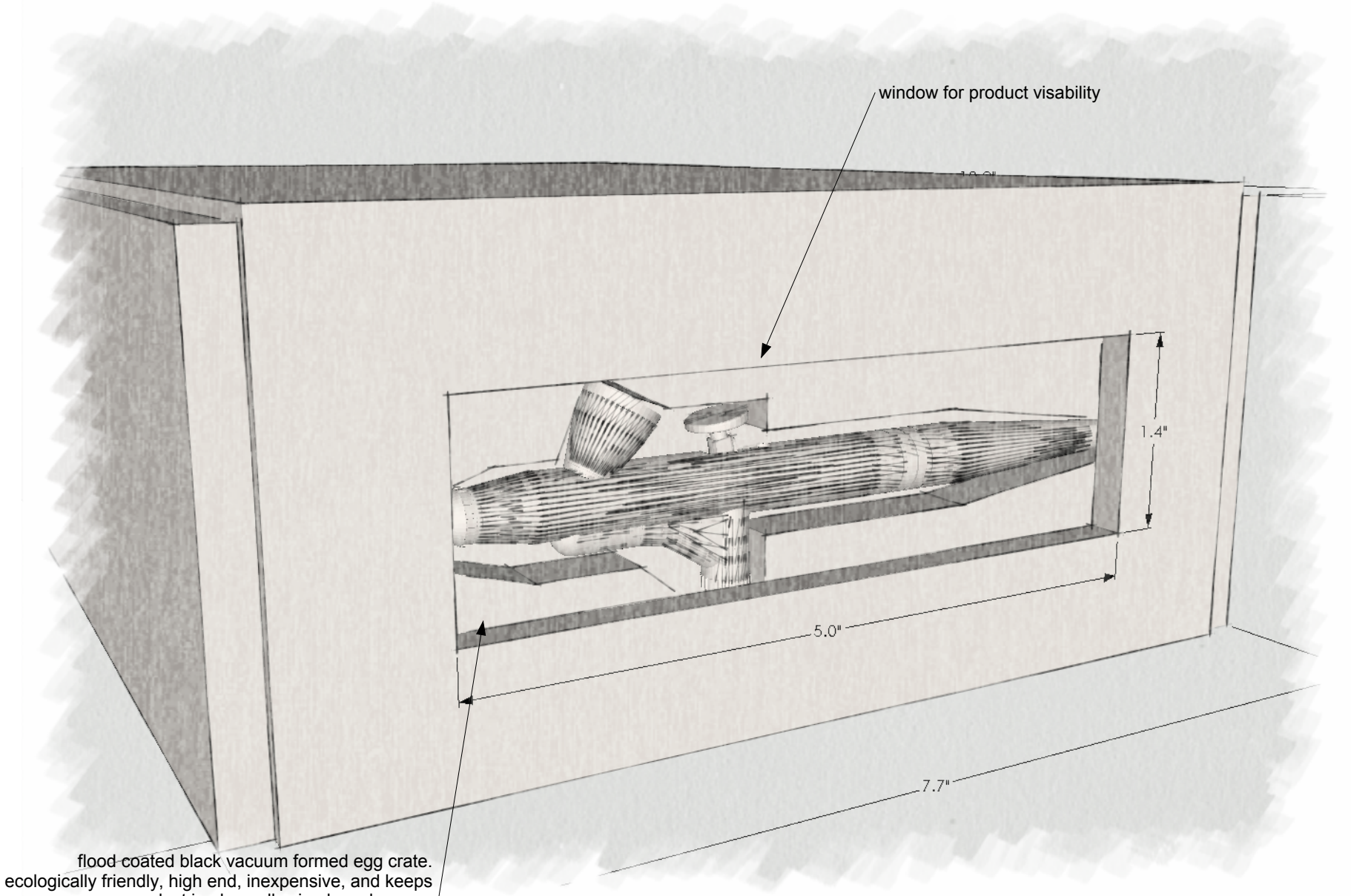

flood coated black vacuum formed egg crate.
ecologically friendly, high end, inexpensive, and keeps
product in place allowing less damage.

this design also allows for merchandising of the boxes
sideways where retail space is at a premium.

CLIENT
luminess air
12802 Capricorn Dr.,
Stafford, Texas 77477
USA ,
Tel 713.532.2408 ex 208 •
Fax 713.532.2499

PROJECT
luminess air CD pos

PROJECT NO.
164

ISSUE
03.09.12

DRAWN BY
jamion blackwell

moio®
DESIGN
16214 Sir William Drive
Spring, TX 77379
Tel: 832.698.1266
contact@mojocosmetics.us

v.1

internals

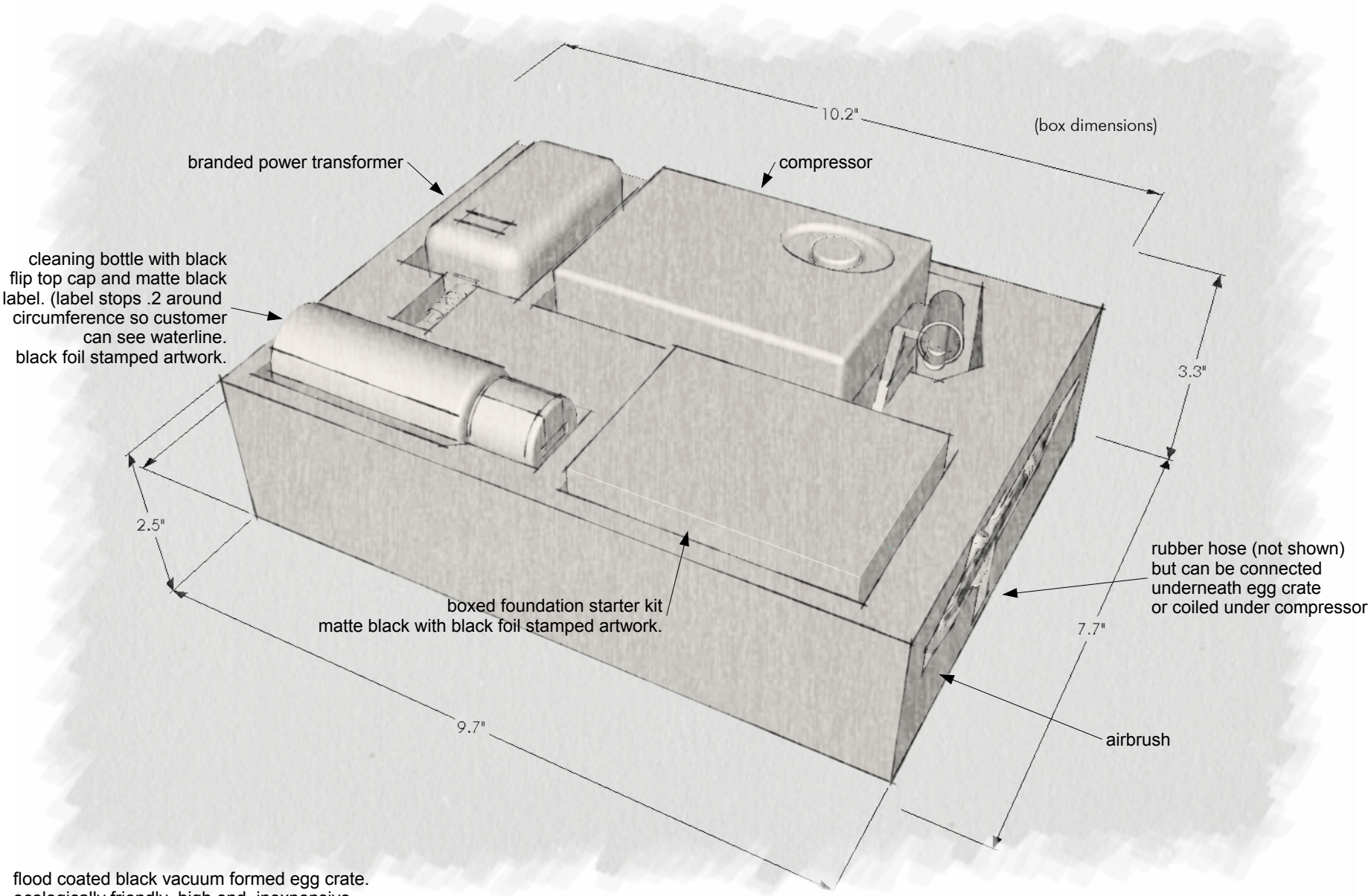

flood coated black vacuum formed egg crate. ecologically friendly, high end, inexpensive compared to foam, and keeps product in place allowing less damage.

product will be more form fitted on actual insert.

all products at equal vertical height to insure marketing collateral sits level.

CLIENT
luminess air
12802 Capricorn Dr.,
Stafford, Texas 77477
USA ,
Tel 713.532.2408 ex 208 •
Fax 713.532.2499

PROJECT
luminess air CD pos

PROJECT NO.
164

ISSUE
03.09.12

DRAWN BY
jamion blackwell

moio®
DESIGN
16214 Sir William Drive
Spring, TX 77379
Tel: 832.698.1266
contact@mojocosmetics.us

v.1

internals (hidden line)

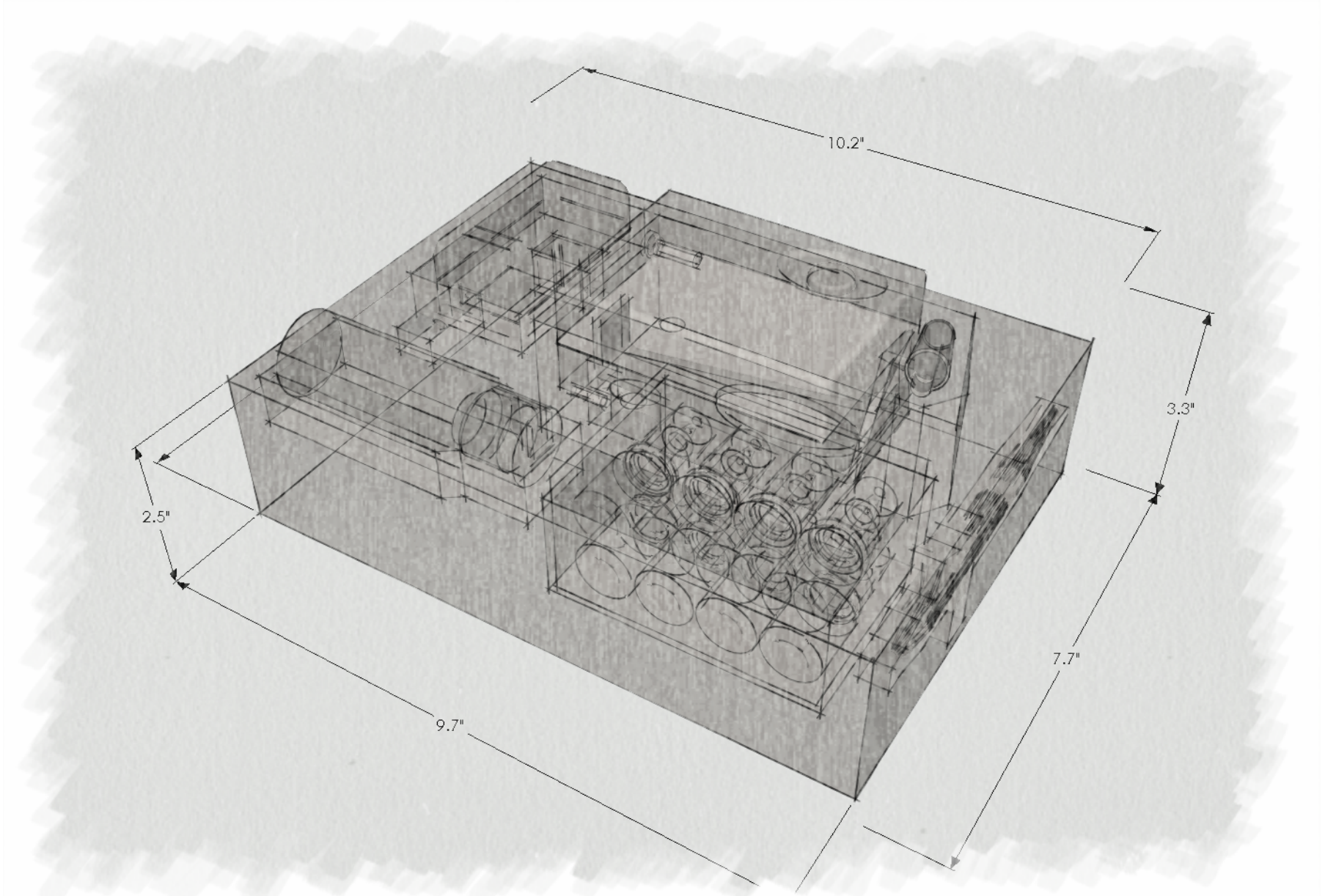

CLIENT
luminess air
12802 Capricorn Dr.,
Stafford, Texas 77477
USA,
Tel 713.532.2408 ex 208 •
Fax 713.532.2499

PROJECT
luminess air CD pos

PROJECT NO.
164

ISSUE
03.09.12

DRAWN BY
jamion blackwell

moio®
DESIGN
16214 Sir William Drive
Spring, TX 77379
Tel: 832.698.1266
contact@mojocosmetics.us

v.1

current airbrush looks

silver/hot pink:

while this unit may appeal to some I believe it can give the product a "toy like" appearance and downplay the quality of the ACS

silver/matte silver:

better option of the two. this variant looks more high end, but the laser etched branding still gets lost on the polished surface.

proposed airbrush looks

matte black with silver trigger:

matte black can be overly done and slightly played out, however it is still the color of choice for MUAs & pros everywhere. this model has high contrast and resists fingerprints. sold with matte black packaging.
black oxide or satin matte anodize finish.

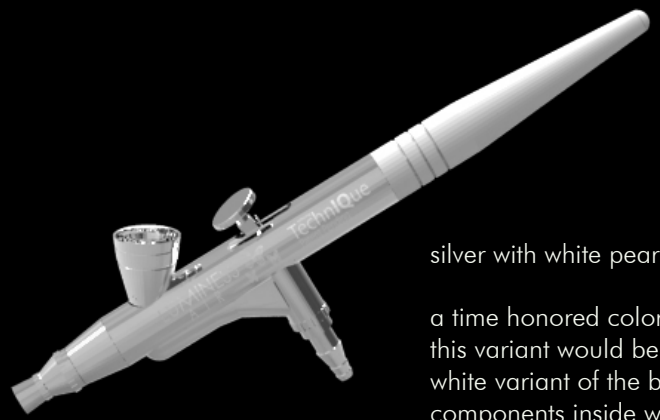

silver with white pearl powdercoat:

a time honored color combination, this variant would be sold with the white variant of the box and all components inside would be white as well including compressor hose and transformer.

CLIENT
luminess air
12802 Capricorn Dr.,
Stafford, Texas 77477
USA,
Tel 713.532.2408 ex 208 •
Fax 713.532.2499

PROJECT
luminess air CD pos

PROJECT NO.
164

ISSUE
03.09.12

DRAWN BY
jamion blackwell

moio DESIGN
16214 Sir William Drive
Spring, TX 77379
Tel: 832.698.1266
contact@mojocosmetics.us

v.1

retail packaging

embossed/debossed front logo. black satin/matte box with high contrast reversed artwork.

can be merchandized front, sideways or a combination of both.

CLIENT
luminess air
12802 Capricorn Dr.,
Stafford, Texas 77477
USA,
Tel 713.532.2408 ex 208 •
Fax 713.532.2499

PROJECT
luminess air CD pos

PROJECT NO.
164

ISSUE
03.09.12

DRAWN BY
jamion blackwell

moio®
DESIGN
16214 Sir William Drive
Spring, TX 77379
Tel: 832.698.1266
contact@mojocosmetics.us

v.1

retail packaging

slight rebranding: ACS. I feel this is very iconic and easy to remember. also, back copy layout is quasi symbolic of american flag .

CLIENT
luminess air
12802 Capricorn Dr.,
Stafford, Texas 77477
USA ,
Tel 713.532.2408 ex 208 •
Fax 713.532.2499

PROJECT
luminess air CD pos

PROJECT NO.
164

ISSUE
03.09.12

DRAWN BY
jamion blackwell

moio DESIGN
16214 Sir William Drive
Spring, TX 77379
Tel: 832.698.1266
contact@mojocosmetics.us

v.1

retail packaging

CLIENT
luminess air
12802 Capricorn Dr.,
Stafford, Texas 77477
USA ,
Tel 713.532.2408 ex 208 •
Fax 713.532.2499

PROJECT
luminess air CD pos

PROJECT NO.
164

ISSUE
03.09.12

DRAWN BY
jamion blackwell

moio®
DESIGN
16214 Sir William Drive
Spring, TX 77379
Tel: 832.698.1266
contact@mojocosmetics.us

v.1

retail insert

black satin/matte inside packaging (compressor shown with current shiny plastic).

We can probably do something stronger with the acs branding on internal packaging, however I feel it's iconic and strengthens the brand.

CLIENT
luminess air
12802 Capricorn Dr.,
Stafford, Texas 77477
USA ,
Tel 713.532.2408 ex 208 •
Fax 713.532.2499

PROJECT
luminess air CD pos

PROJECT NO.
164

ISSUE
03.09.12

DRAWN BY
jamion blackwell

moio DESIGN
16214 Sir William Drive
Spring, TX 77379
Tel: 832.698.1266
contact@mojocosmetics.us

v.1

retail insert & airbrush

current variant with matte
black/silver trigger and nozzle.

can be shipped without internal
foundation box if needed or
backordered.

CLIENT
luminess air
12802 Capricorn Dr.,
Stafford, Texas 77477
USA ,
Tel 713.532.2408 ex 208 •
Fax 713.532.2499

PROJECT
luminess air CD pos

PROJECT NO.
164

ISSUE
03.09.12

DRAWN BY
jamion blackwell

moio®
DESIGN
16214 Sir William Drive
Spring, TX 77379
Tel: 832.698.1266
contact@mojocosmetics.us

v.1